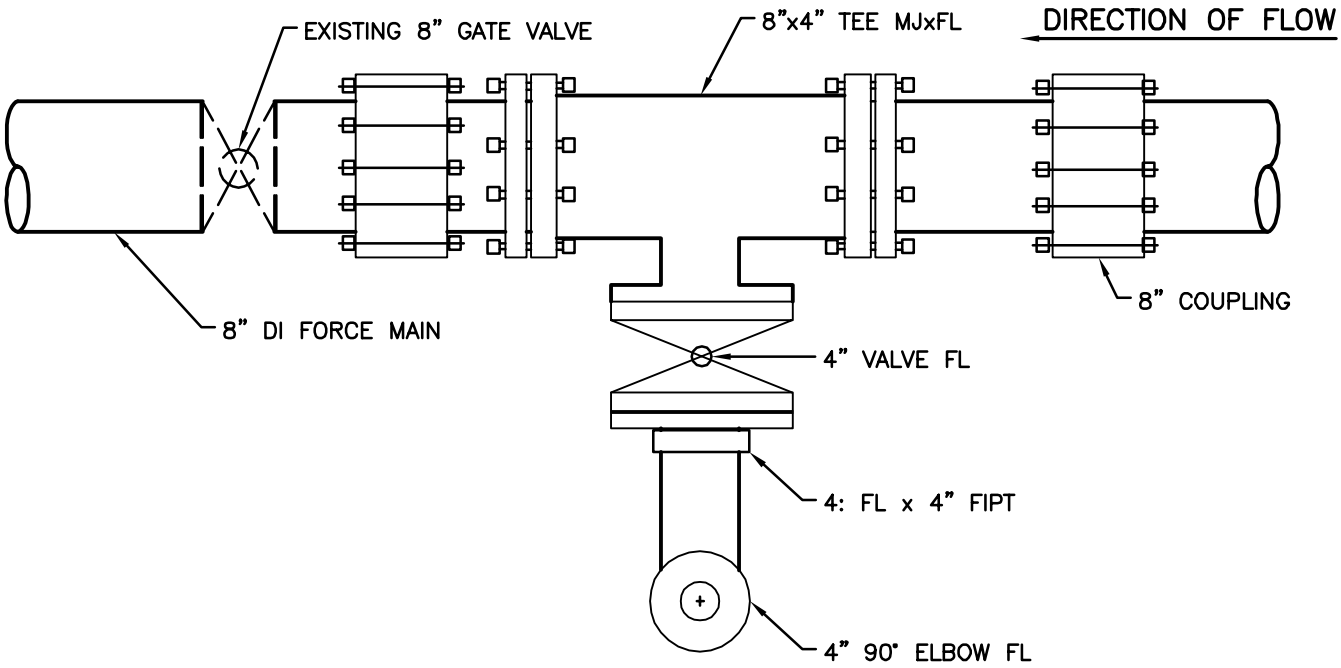

TOP VIEW

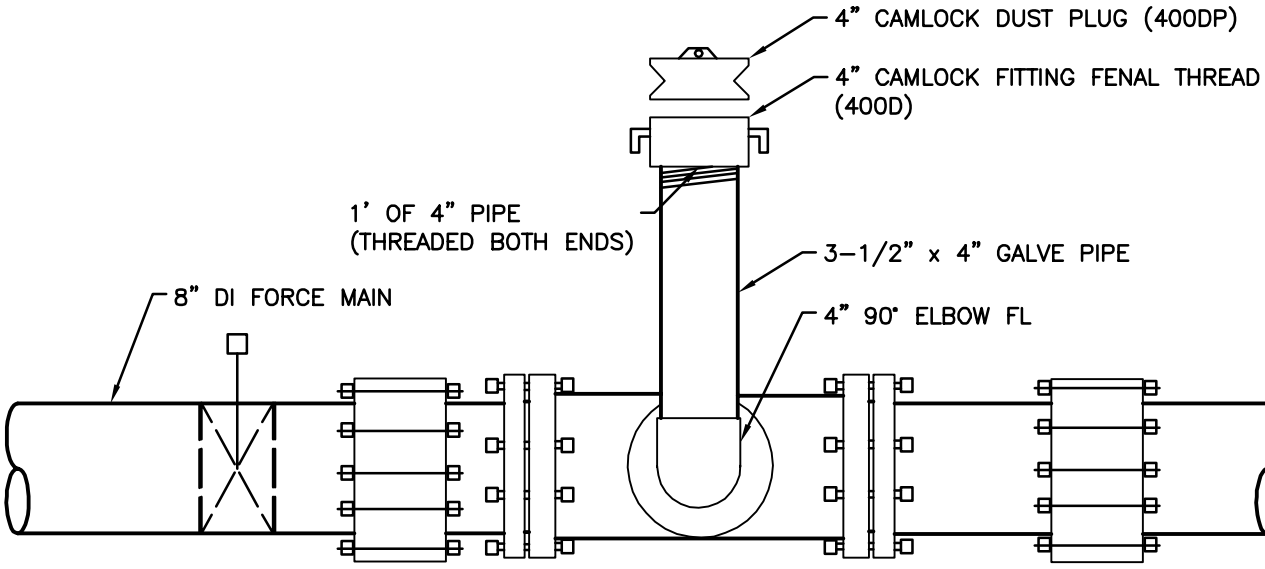

FRONT VIEW

CITY OF EDMONDS
PUBLIC WORKS DEPARTMENT
Est. 1890

SEWER BY-PASS SYSTEM

APPROVED BY: **R. ENGLISH**

REVISION DATE
JANUARY 2018

STANDARD DETAIL
SS-240