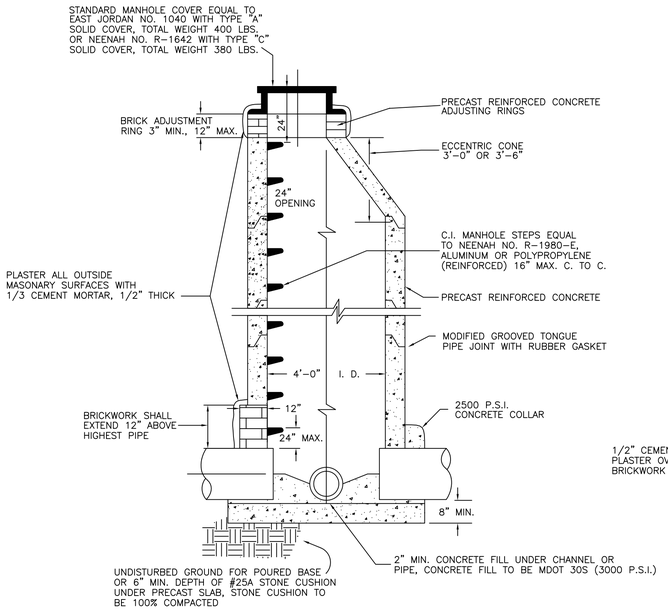

STANDARD MANHOLE

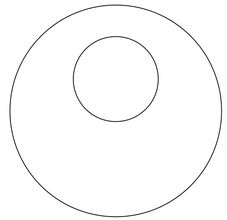

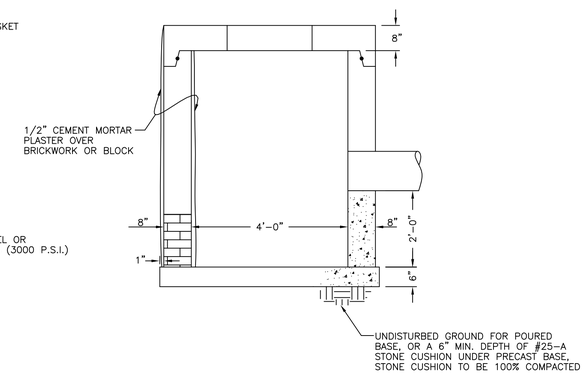

FLAT TOP CATCH BASIN

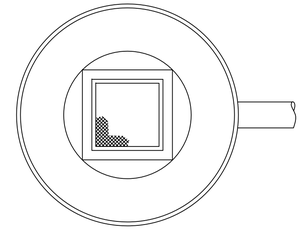

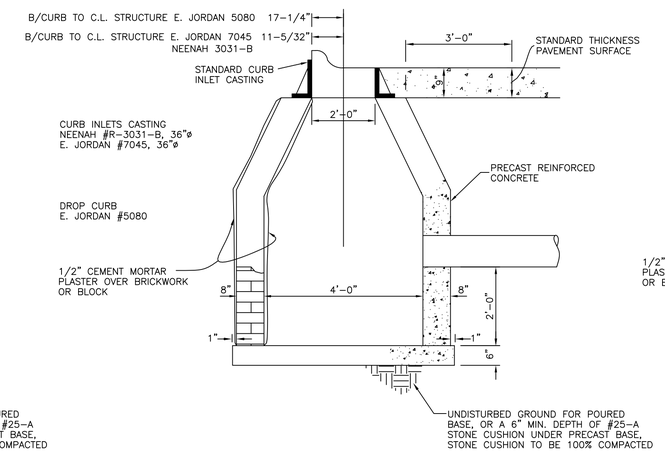

STANDARD CATCH BASIN

BLOCK, BRICK, OR CONCRETE

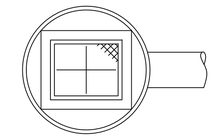

CONCRETE

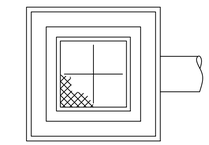

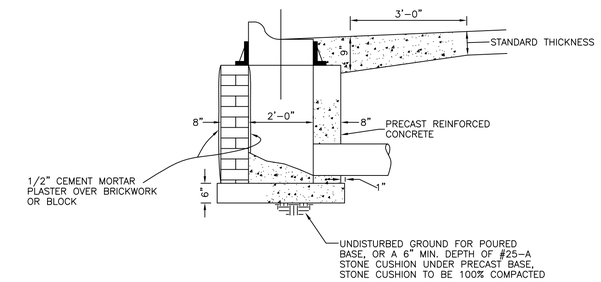

STANDARD INLET

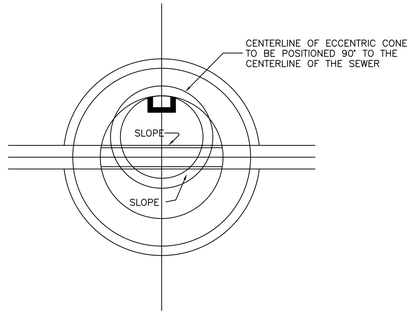

TOP VIEW OF MANHOLE

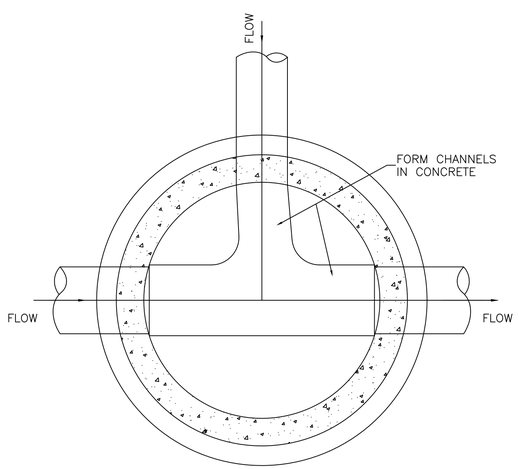

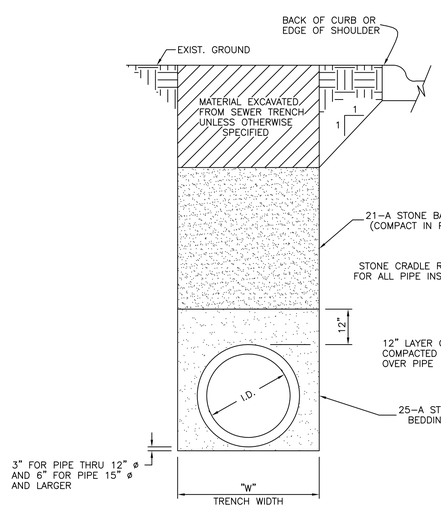

BACKFILL OUTSIDE PAV'T

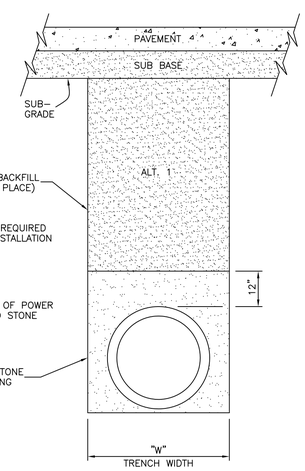

BACKFILL-PARKING LOTS & DRIVES

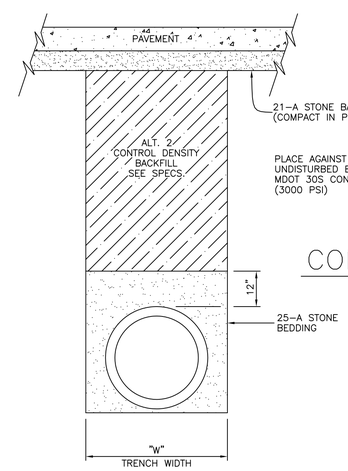

BACKFILL UNDER PAV'T

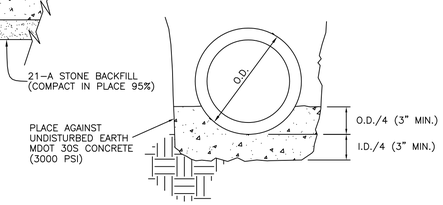

CONCRETE CRADLE BEDDING

I.D. PIPE(INCHES)	18" & LESS	21"	24"	27"	30"	33"	36"	42"	48"	54"	60"	66"	72"	78"	84"	90"	96"	102"	108"
"W" TRENCH WIDTH(FEET)	3.0'	3.5'	4.0'	4.5'	5.0'	5.5'	6.0'	7.0'	8.0'	9.0'	10.0'	10.5'	11.0'	11.5'	12.0'	12.5'	13.0'	13.5'	14.0'

STANDARD BEDDING & BACKFILL

(UNDER ROADBED OR WITHIN INFLUENCE OR ROADBED)

TYPICAL TRENCH PAY LIMITS

GENERAL NOTES

1.) ON STANDARD PRECAST MANHOLE, PRECAST OPENINGS MAY BE USED FOR SEWERS 15" & SMALLER. FOR ALL LARGER SEWERS, BRICKWORK SHALL EXTEND TO 12" ABOVE THE TOP OF HIGHEST PIPE.

2.) WHERE TRENCH IS IN SAND OR GRAVEL, THE MAXIMUM TRENCH WIDTH AT TOP OF PIPE SHALL NOT EXCEED O.D.+24". WHERE CONDITIONS REQUIRE, CONSOLIDATE BASE BOTTOM OF PIPE WITH AT LEAST 6" OF STONE OR GRAVEL WITH CEMENT RODED AS DIRECTED BY ENGINEER.

3.) 25-A STONE BEDDING SHALL BE USED TO PROVIDE A STABLE FOUNDATION FOR PIPE & MANHOLES. COST TO BE INCLUDED IN THE UNIT PRICE FOR PIPE.

4.) 21-A STONE BACKFILL WHERE CALLED FOR ON PLANS, OR REQUIRED BY THE ROAD PERMIT, SHALL BE INCLUDED IN THE UNIT PRICE FOR PIPE.

5.) WHERE TUNNEL OR JACKING IS USED, THE CONTRACTOR MAY USE A LARGER DIA. PIPE AS APPROVED BY THE ENGINEER.

6.) WHEREVER EXISTING MANHOLES ARE TO BE TAPPED, DRILL HOLES AT 4" CENTER TO CENTER AROUND PERIPHERY OF OPENING TO CREATE A PLANE OF WEAKNESS JOINT, BEFORE BREAKING SECTION OUT.

7.) ALL LOT MARKERS & MONUMENTS POINTS DESTROYED OR DISTURBED DURING CONSTRUCTION SHALL BE REPLACED BY A REGISTERED LAND SURVEYOR AT THE CONTRACTOR'S EXPENSE.

8.) ALL CONCRETE PIPE SHALL BE "MODIFIED GROOVE TONGUE" WHICH SHALL CONSIST OF AN APPROVED RUBBER GASKET PLACED IN A RECESS GROOVE (MIN. DEPTH OF GROOVE 1/8") ON SPIGOT OF PIPE, AS APPROVED BY THE ENGINEER.

9.) SERVICE LEAD CONNECTIONS TO MAIN LINE SEWER PIPE SHALL BE MADE BY CORING A HOLE IN THE PIPE AND USING A SADDLE FITTING.

REVISIONS		
NO.	DRAWN BY:	DATE:
1	TGP	APRIL, 1986
2	BM	JULY, 1992
3	BW	MAY, 2001

DWG. OF RECORD

DATE:

CITY OF MONROE, MICHIGAN
ENGINEERING DEPARTMENT

STANDARD DETAILS FOR STORM SEWERS

SCALE: NONE FILE NO. F-419

DATE: MARCH. 1984 SHEET NO. 1 OF 1

APPROVED: _____
CITY ENGINEER